PART NUMBER	DESCRIPTION	QTY.
WML120-11-2 - Production Release	Sabre Tine Leg Clamp Assy	1
TU-760-010-020	Rubber Toblerone - 137mm	4
WML120-11-1	Sabre Tine Leg Fabrication	1
WMEXH01	Exhaust rubber	1
WM1M	Jubilee Clip 32 -45mm Dia	2
WML120-11-2-4 - Rev 2	Sabre Tine Coulter Bracket 2019 - Top Clamp	1
WML120-11-3 - Rev 1	SABRE TINE COULTER SEED TUBE	1
S.266	PIPE LNCH PIN - 8mm X 57mm	1
FA12FW	M12 REGULAR FLAT WASHER	12
FA1255SS	M12 COURSE X 55mm SET SCREW	6
FA12NY	M12 NYLOC NUT	6

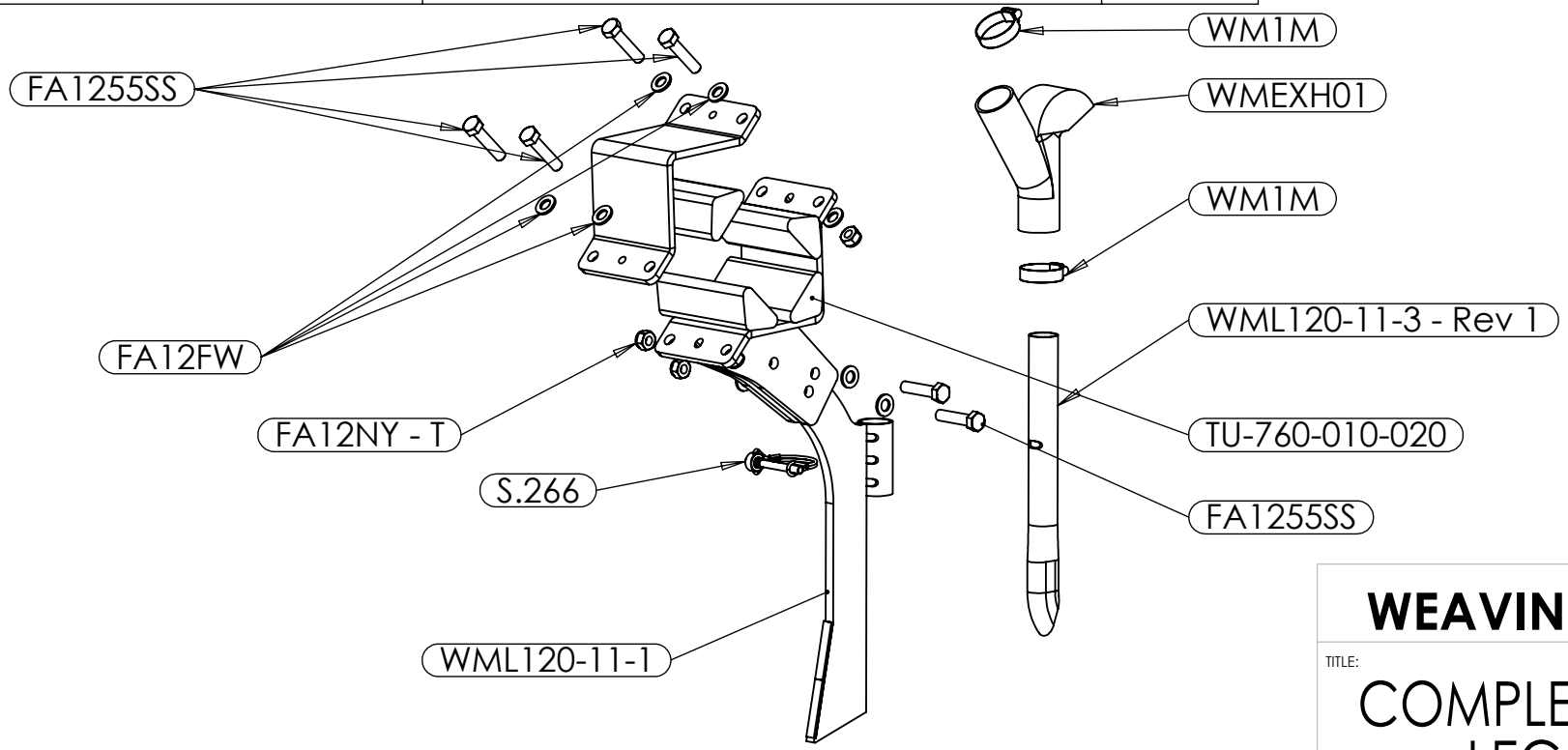

WEAVING MACHINERY

TITLE:

COMPLETE SABRE TINE LEG MODULE

REVISON	DESCRIPTION	DRAWN	DATE
C		DMB	
B		DMB	
A	PRODUCTION RELEASE	DMB	

UNLESS OTHERWISE SPECIFIED:
DIMENSIONS ARE IN MILLIMETERS
SURFACE FINISH:
TOLERANCES:
LINEAR:
ANGULAR:

FINISH:

MATERIAL:

WEIGHT:

DWG NO.

REVISION

A4

DO NOT SCALE DRAWING

DEBUR AND BREAK SHARP EDGES

SCALE:1:8

SHEET 1 OF 2

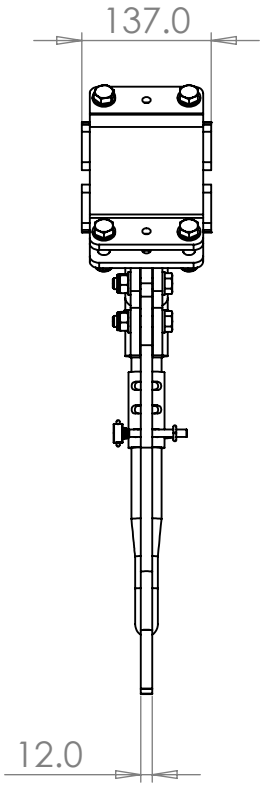

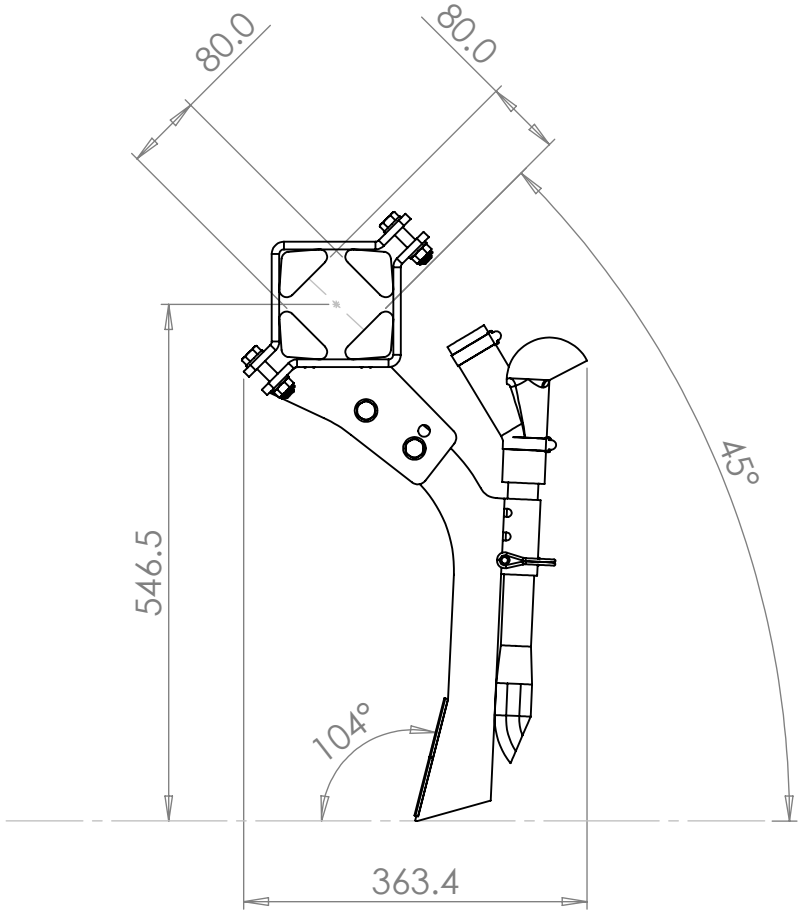

WEAVING MACHINERY

TITLE:

COMPLETE SABRE TINE LEG MODULE

REVISON	DESCRIPTION	DRAWN	DATE
C		DMB	
B		DMB	
A	PRODUCTION RELEASE	DMB	

UNLESS OTHERWISE SPECIFIED:
DIMENSIONS ARE IN MILLIMETERS
SURFACE FINISH:
TOLERANCES:
LINEAR:
ANGULAR:

FINISH:

MATERIAL:

WEIGHT:

DWG NO.

REVISION

A4

DO NOT SCALE DRAWING

DEBUR AND BREAK SHARP EDGES

SCALE:1:8

SHEET 2 OF 2